PYRAMID

PV021

YEAR OF DESIGN 1950's

Povl M. Volther

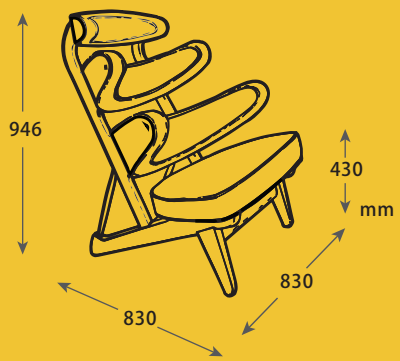

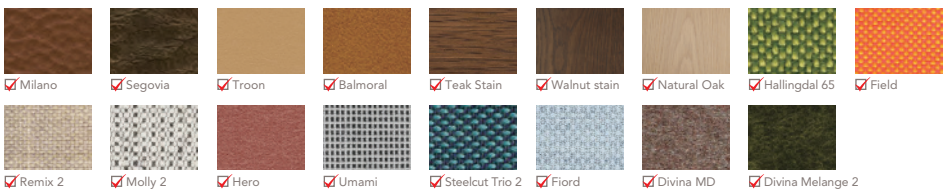

MATZ FORM

309 Hankou Road #207 Huangpu District Shanghai 200001 China
PHONE +86-21-6380 4262 FAX +86-21-6380 5259 EMAIL hello@matzform.com